California Polytechnic State University Pomona
DEPARTMENT OF ELECTRICAL & COMPUTER ENGINEERING

Digital Logic Design Laboratory

ECE 2300L

Report #6 Experiment 6

BCD to Seven-Segment Decoder

Prepared by

Kevyn Santos & Yanming Feng

Presented to

Dr. Yazdy R Mostafa

October 19 , 2023

Introduction:

In this lab, our objective is to effectively use a BCD to 7-segment decoder and implement it into our circuit.

Pre-Lab:

<u>BCD to 7-segment decoder (74LS47) pinout:</u>

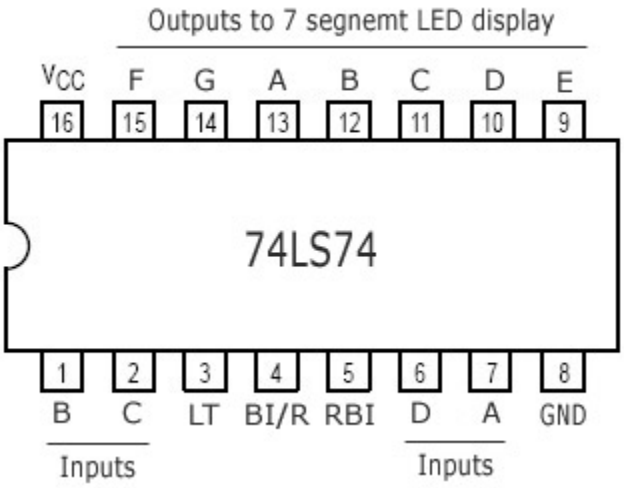

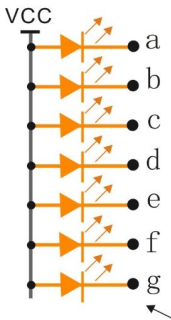

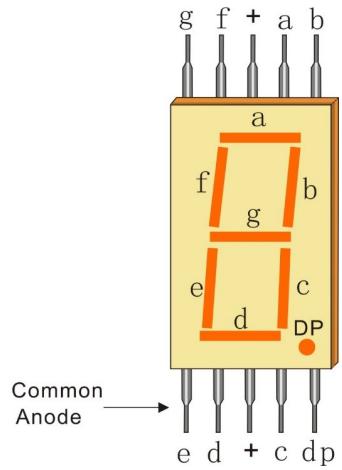

Procedure:

Fig 1 shows when we have 3 in binary for our input, which resulted in the 7 segment display showing a “3”.

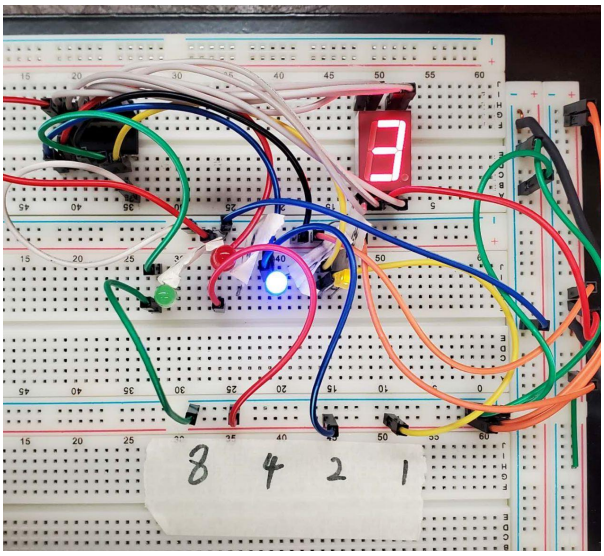

Fig. 1

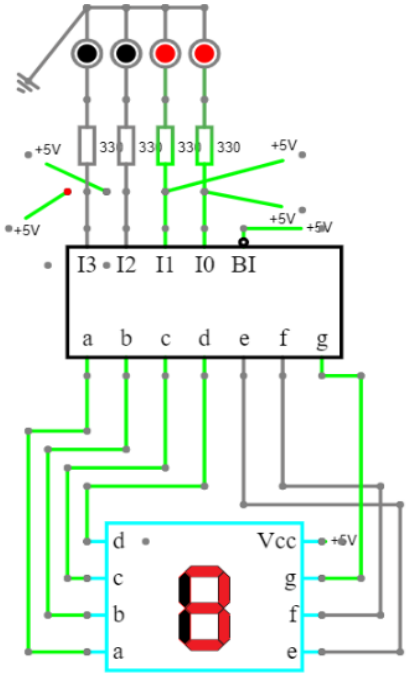

Fig. 1 diagram

Fig. 2 shows when we have 2 in binary for our input, which resulted in the 7 segment display showing a “2”

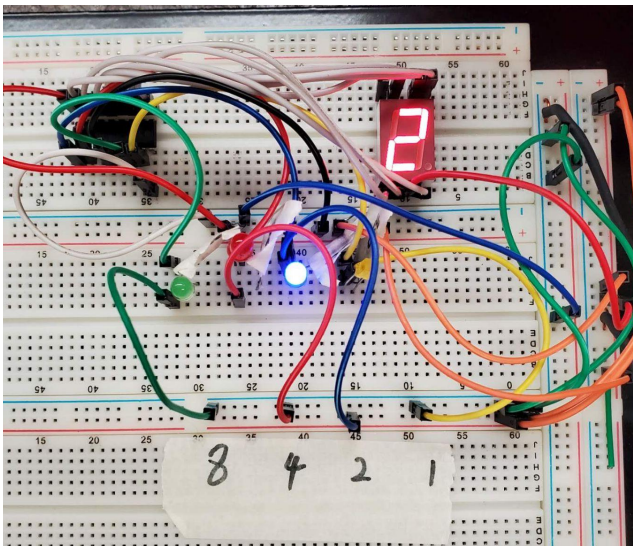

Fig. 2

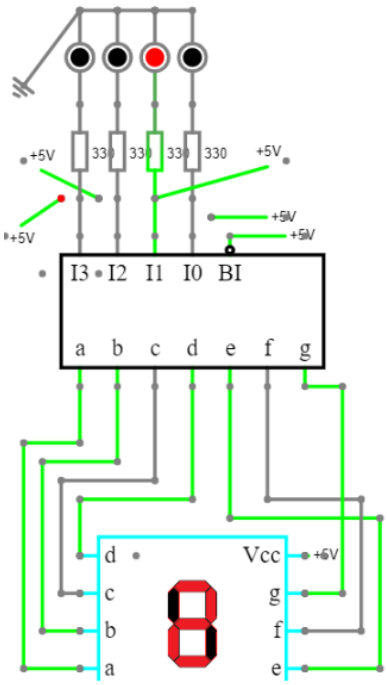

Fig. 2 diagram

Fig. 3 shows when we have 4 in binary for our input, which resulted in the 7 segment display showing a “4”

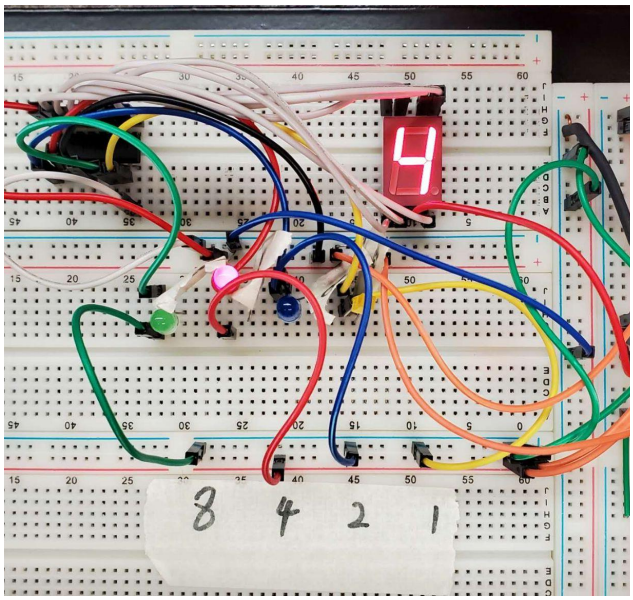

Fig. 3

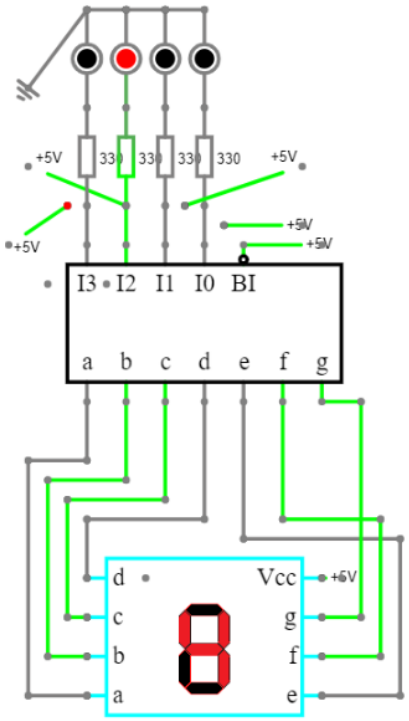

Fig. 3 diagram

Fig. 4 shows when we have 9 in binary for our input, which resulted in the 7 segment display showing a “9”

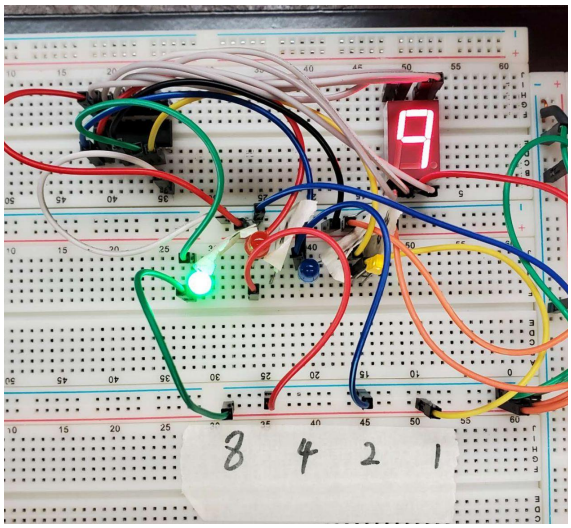

Fig. 4

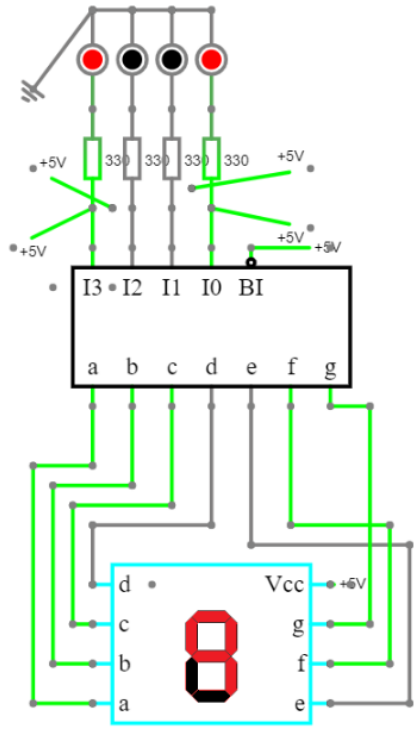

Fig. 4 diagram

Fig. 5 shows when we have 8 in binary for our input, which resulted in the 7 segment display showing a “8”

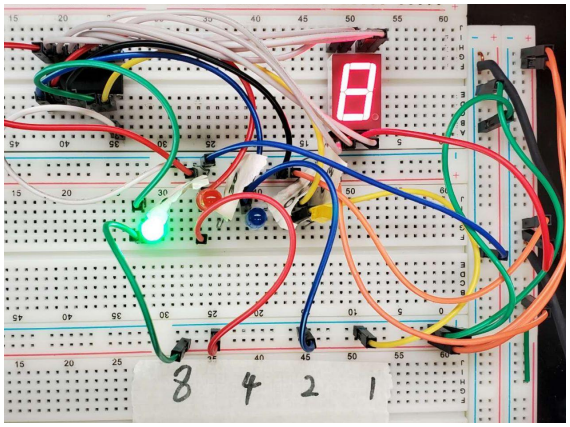

Fig. 5

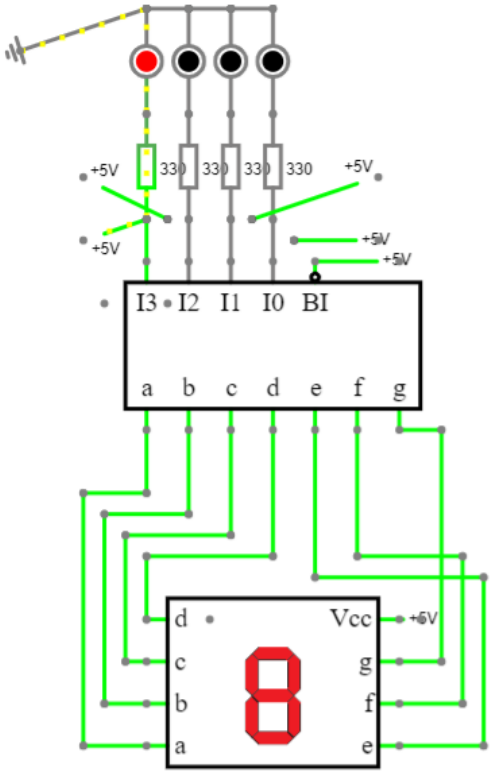

Fig. 5 diagram

Fig. 6 shows when we have 8 in binary for our input, which resulted in the 7 segment display showing a “6”

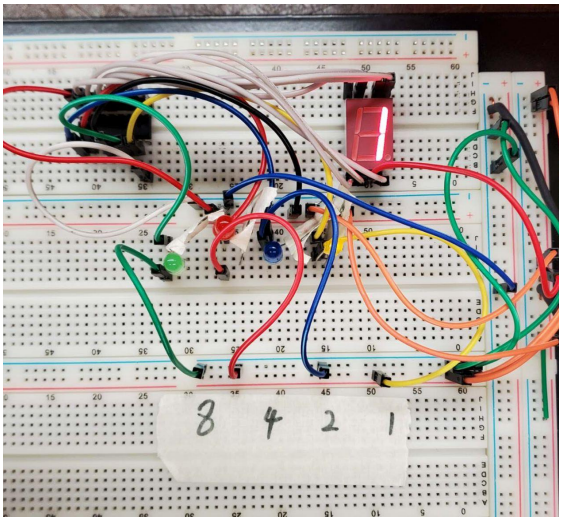

Fig. 5

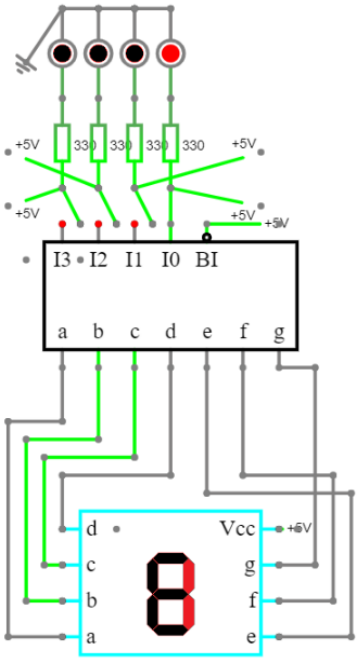

Fig. 5 diagram

Post-Lab:

<u>What is the difference between 7447 and 7448?</u>

The difference is that 7447 will decode the BCD and make the outputs for a common anode 7-segment where the 7448 will decode the BDC and make the respective outputs for a common cathode 7-segment display.

<u>7 segment display that turns off after 9 schematic:</u>

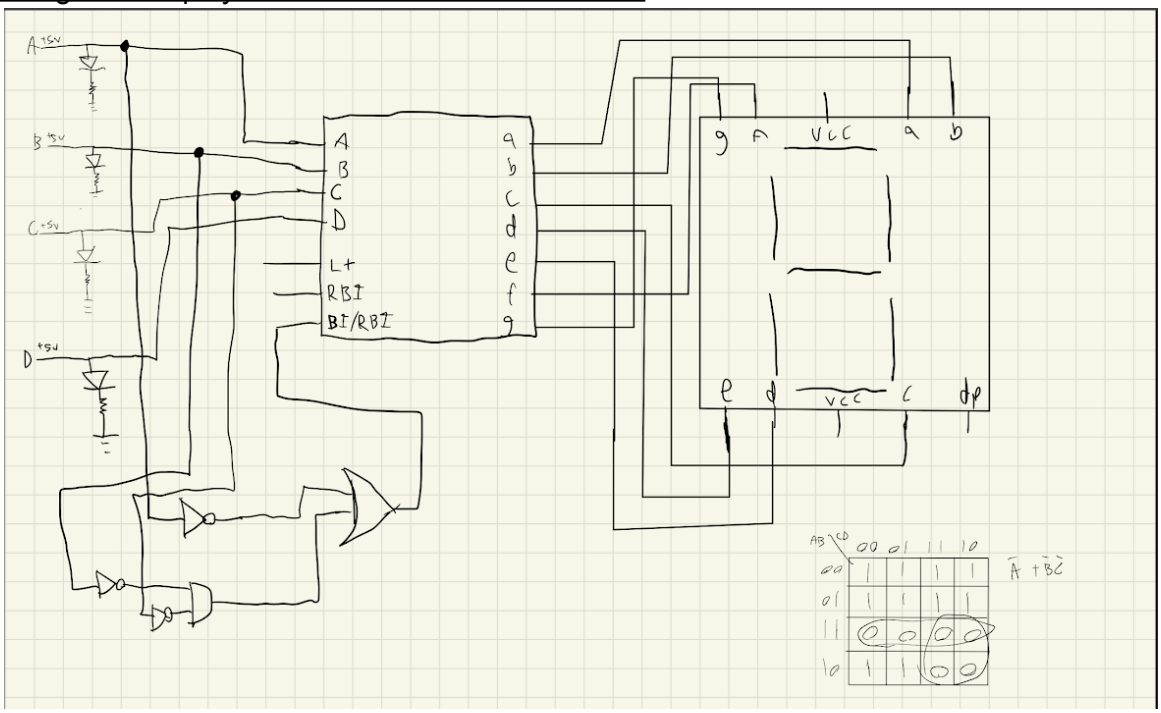

Conclusion:

In the context of this laboratory experiment, we have achieved the successful fulfillment of our primary objective. This objective entailed the design and utilization of a decoder to showcase numbers on 7-Segment LED Displays. Our data inputs functioned as the determinants, dependent on the select inputs, allowing us to effectively display numbers through the input of binary code.